mount-n-lock.com
CARGO REINVENTED

SELECTION GUIDE

Choose the Tray Kit That Best Meets Your Needs

GENNYGO
GENERATOR & CARGO CARRIERS

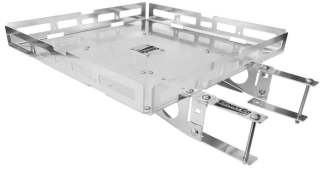

1GKA GennyGo™ RV Bumper Mounted Alum. Generator & Cargo Tray

- Ideal for Short Trailers, Ultralight Campers, and Pop-Ups
- Aluminum Tray Pan - Aluminum Support Arms & Brackets
- Assembly Weighs 11 Pounds and Carries 125 Pound-Feet*

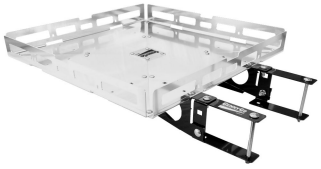

1GKH GennyGo™ RV Bumper Mounted Hybrid Generator & Cargo Tray

- Same Capacity as Steel Kit in a Much Lighter Package
- Aluminum Tray Pan - Steel Support Arms & Brackets
- Assembly Weighs 15 Pounds - Carries 200 Pound-Feet*

1GKS GennyGo™ RV Bumper Mounted Steel Generator & Cargo Tray

- Rugged All-Steel Design with Durable Glossy Black Finish
- Steel Tray Pan with Steel Support Arms and Brackets
- Assembly Weighs 23 Pounds - Carries 200 Pound-Feet*

* Pound-Feet = Weight of Cargo (in Pounds) x Distance Center of Weight is From Bumper (in Feet)

© Copyright 2018 BetterBilt Solutions LLC. All Rights Reserved. Patents Pending.

mount-n-lock.com
CARGO REINVENTED

ASSEMBLY OPTIONS

Assemble Your GennyGo™ Tray Kit in Any of These Ways!

GENNYGO
GENERATOR & CARGO CARRIERS

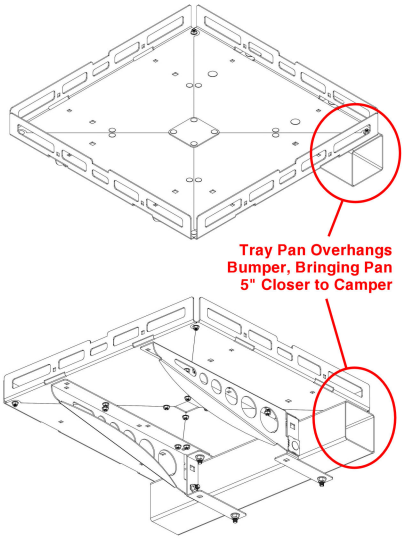

COMPACT ASSEMBLY

- Ideal for Heavier Items (Moves Weight Inward)
- Pan Mounts Over Bumper (5" Less Extension)
- Won't Work Where Body Overhangs Bumper

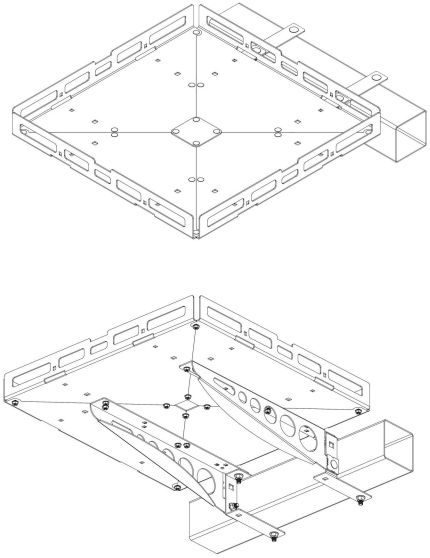

STANDARD ASSEMBLY

- Ideal for RVs Where Body Overhangs Bumper
- Allows for the Combining of Additional Trays
- Allows for Use of Ramps (with Sides Inverted)

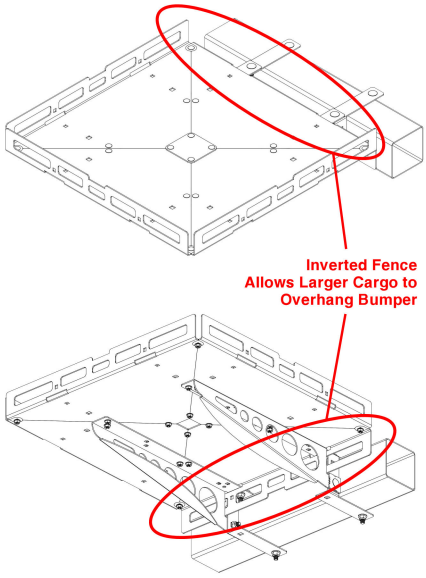

EXTENDED ASSEMBLY

- Ideal for Larger Cargo (Creates 29" Deep Area)
- Allows for the Combining of Additional Trays
- Allows for Use of Ramps (with Sides Inverted)

© Copyright 2018 BetterBilt Solutions LLC. All Rights Reserved. Patents Pending.