Mount-n-Lock™ Heavy Duty RV Bumper
Mounting Plate Dimensions

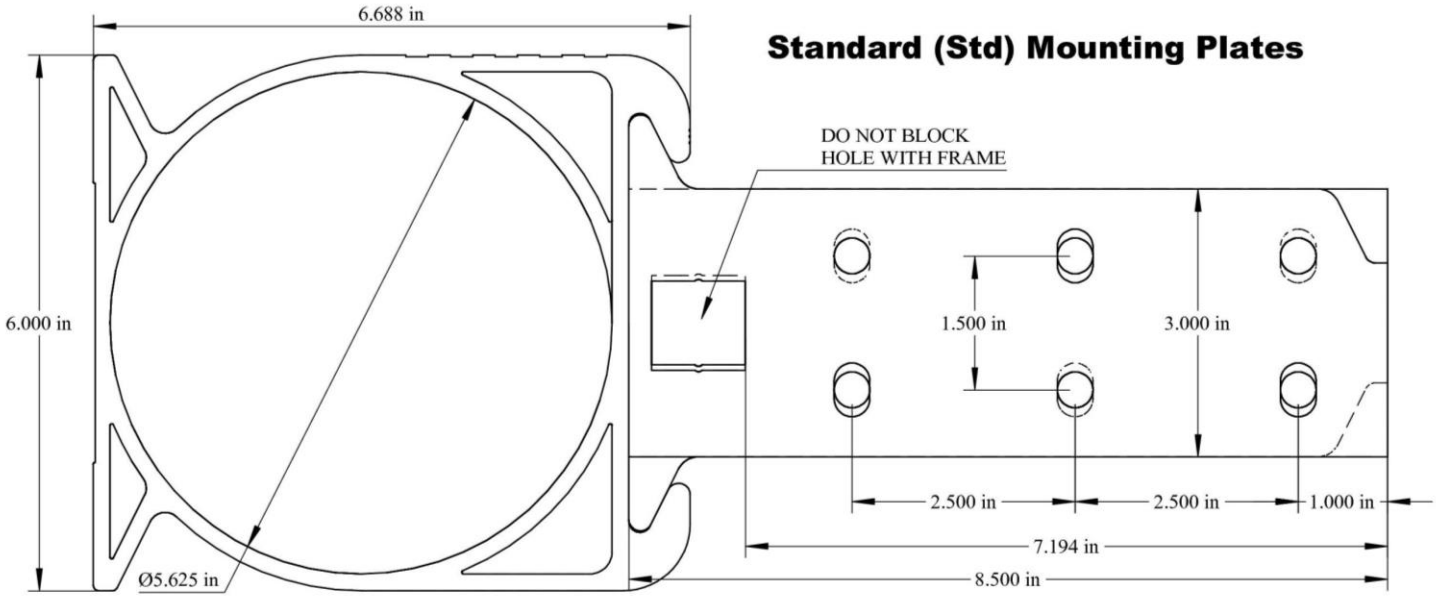

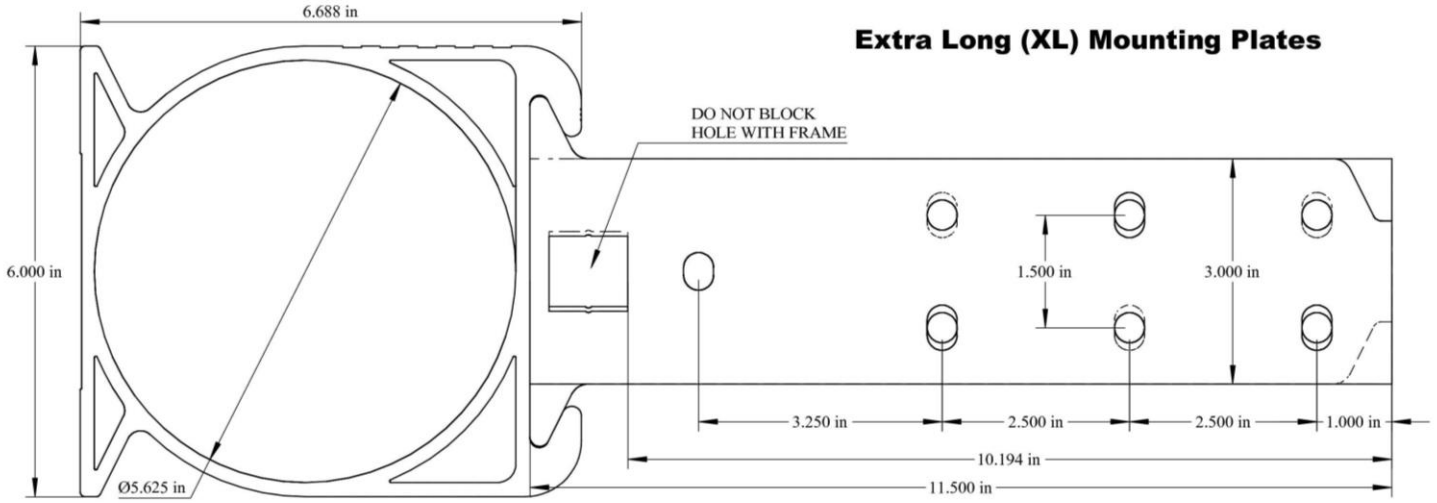

CONFIDENTIAL AND PROPRIETARY INFORMATION
© Copyright 2016 BetterBilt Solutions LLC. All Rights Reserved. Patents Pending.